deck privacy fence

Fig. A

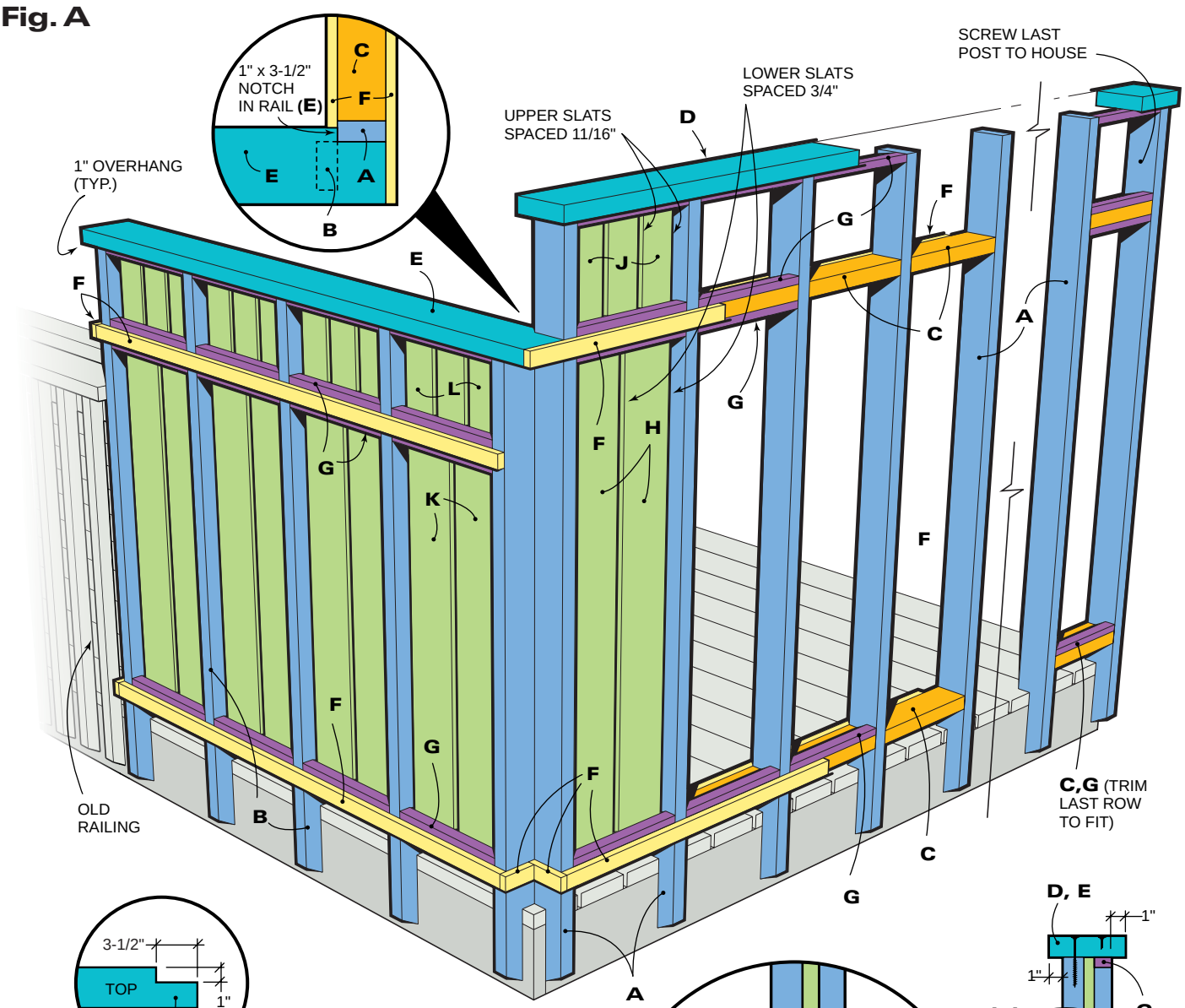

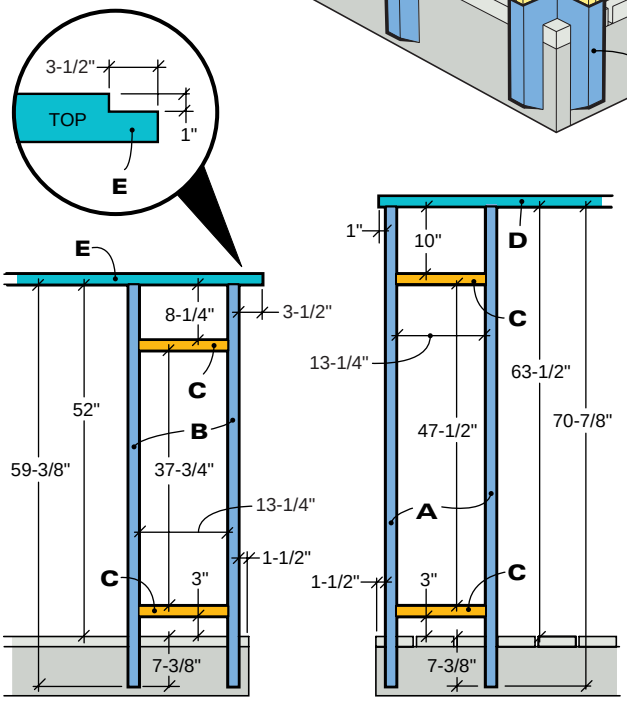

POST AND RAIL LAYOUT

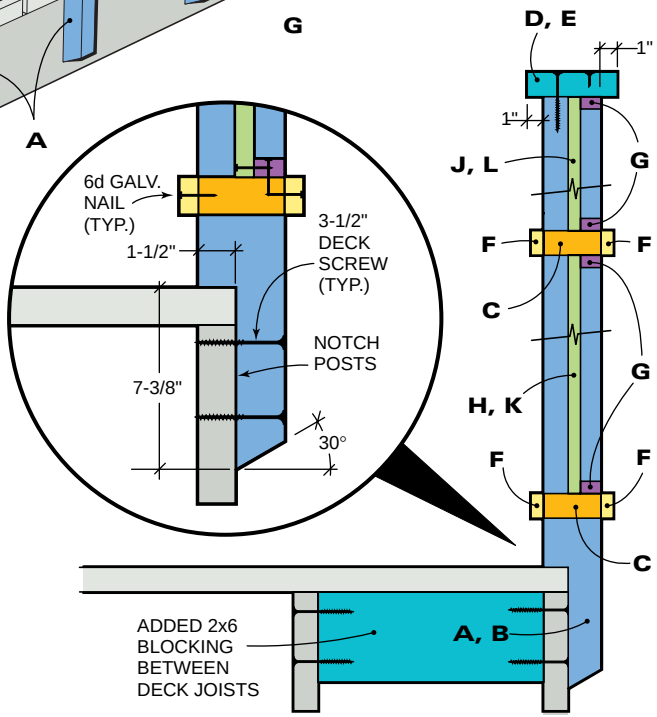

TYPICAL CROSS SECTION