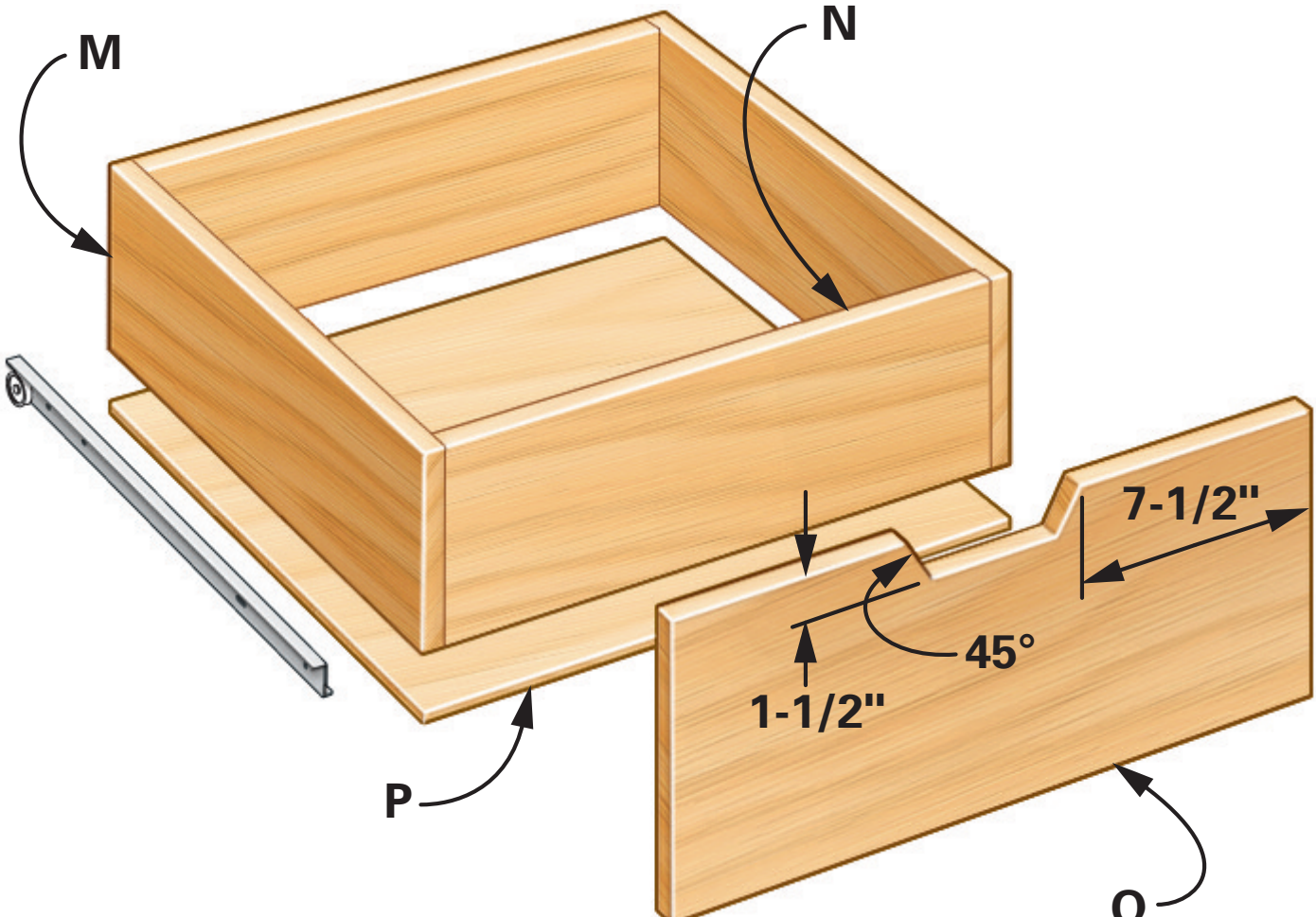
M
N
7-1/2"
45°
1-1/2"
P
Q