Figure C
Railing details

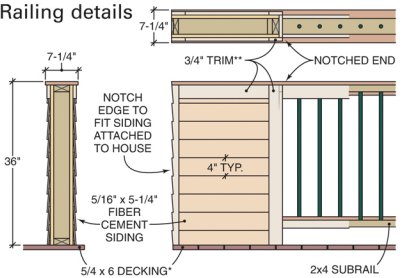

End railing:
To house

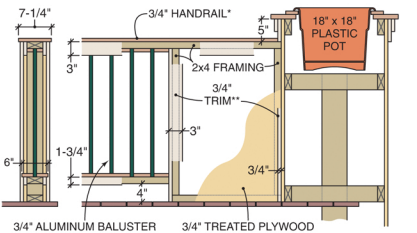

End railings:
To planters

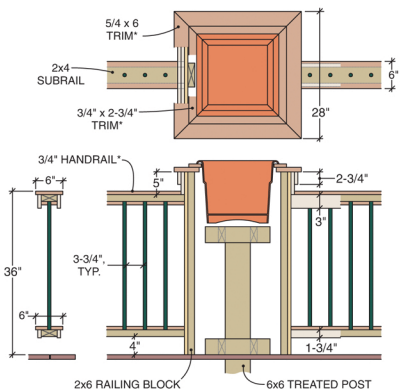

Front railings:
To planters

*TREX OR SIMILAR COMPOSITE
**MIRATEC OR SIMILAR ENGINEERED WOOD PRODUCT