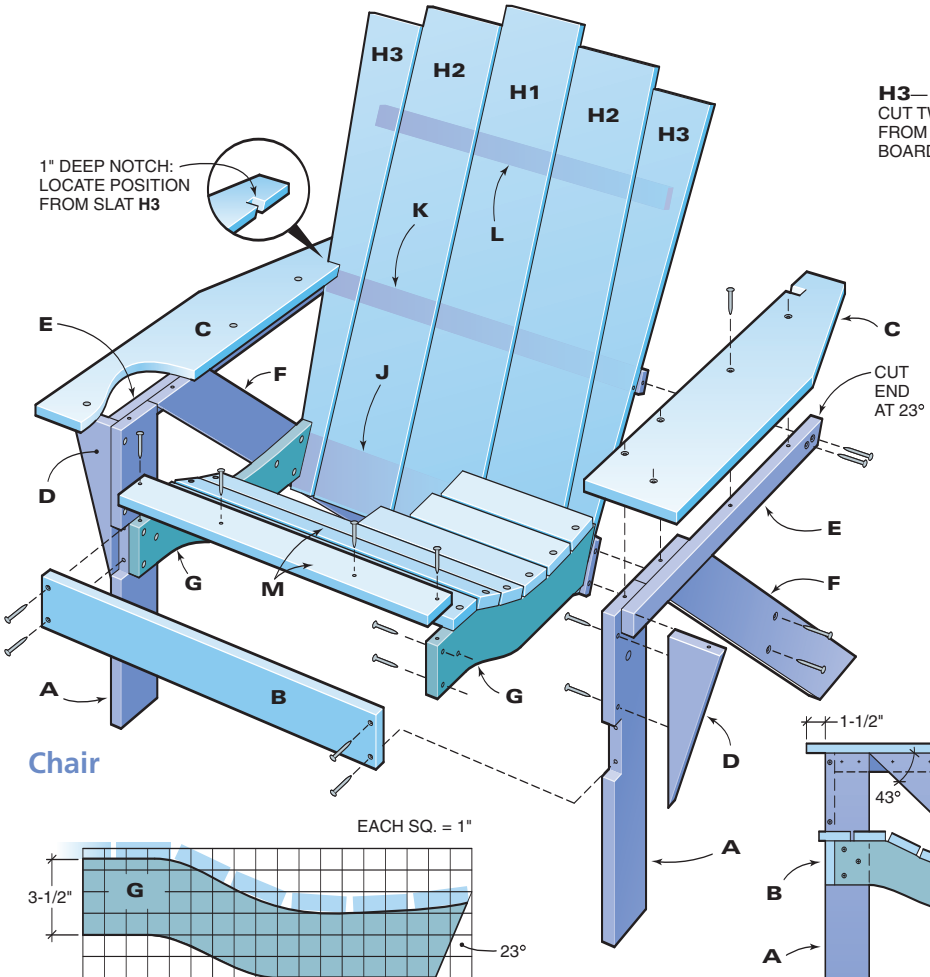

Chair

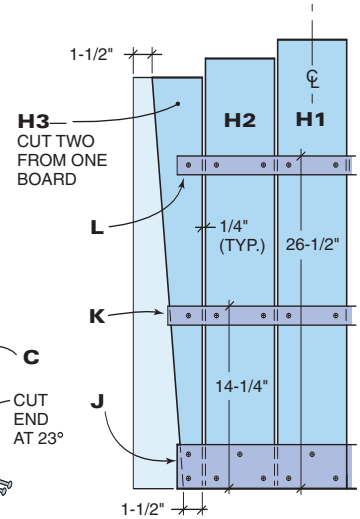

Back assembly

Seat brace pattern

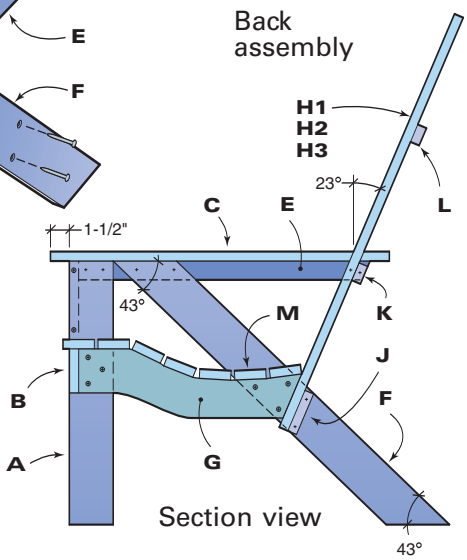

Section view

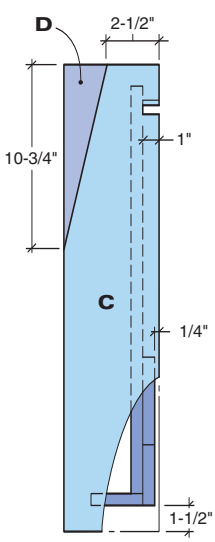

Arm pattern

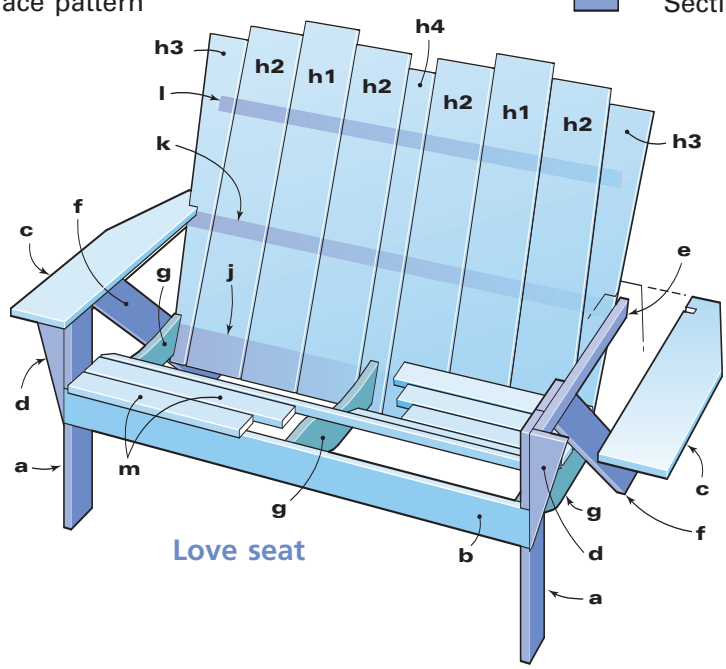

Love seat

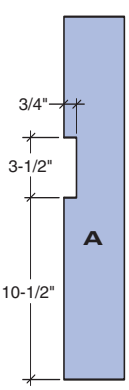

Leg pattern